KD Digital Countdown Series Action 1 & Action 2 Icsotimer

# Digital Countdown Delay Timer

Phone 847-797-6678
sales@ics-timers.com

The heart of a **KD Series Digital Countdown OFF or ON DELAY Timer** is a digital integrated circuit. The timer function is to provide either an OFF DELAY or ON DELAY to a load such as a relay. The timing range can be either fixed or variable by means of an external resistor or potentiometer connected to the timer. The modules can be mounted to a circuit board as single or multiple units. With 1.75" leads, they can easily be wired to fit many applications requiring a miniature delay module. Available in standard and nonstandard voltages, the digital countdown timer series is quite versatile for use in time delay relay applications.

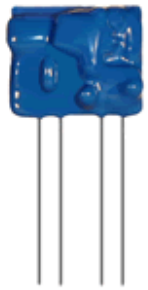

ON DELAY

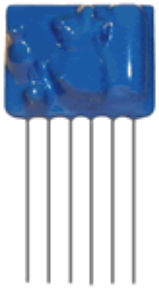

OFF DELAY

- **Timer Ranges from .1 second to 10 hour**
- **Digital Countdown Delay Circuit**
- **On or OFF DELAY Fixed or Adjustable**
- **Miniature PC Board**
- **Printed Circuit Mounting**
- **Thick Conformal Coating**

| | | |
|---|---|---|
| **Timer Action:** | (2) OFF DELAY<br>(1) ON DELAY | Fixed or Adjustable Delay |
| **Delay Range:** | Standard Timing:<br>(1) 0.1 to 10 second<br>(4) 1 to 60 second<br>(2) 10 to 600 second<br>(5) 1 to 60 minute | Nonstandard Timing:<br>(3) 10 to 600 minute<br>(0) *Special Time |
| **Input Voltage:** | Standard Voltage:<br>(2) 24 VAC<br>(1) 120 VAC<br>(8) 12 VDC<br>(4) 24 VDC | Nonstandard Voltage:<br>(7) 12 VAC<br>(5) 240 VAC<br>(6) 48 VDC<br>(3) 110 VDC |

**Order Code Example:**
KD = Digital Countdown Series
2 = Timer Action = OFF DELAY
5 = Timer Range = 1 to 60 minute
1 = Input Volts = 120 VAC

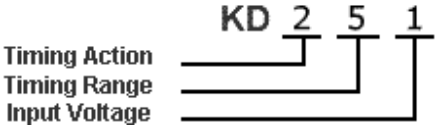


*Options: Fixed and Special Time ranges from .05 seconds to 10 hours.

ICS, A Unit of Qcircuits Inc. 2775 Algonquin Road Suite 300 Rolling Meadows, IL 60008
TEL (847) 797-6678 www.ics-timers.com FAX (847) 797-7418
© 2015 ICS, A Unit of QCircuits Inc.

# Digital Countdown Timer Specification
# ON DELAY & OFF DELAY

Phone 847-797-6678
sales@ics-timers.com

| | |
|---|---|
| **Input Current:** | Idle (Action 2) = 5 ma.<br>Control Switch: (Action 2 Only) = 5 ma. |
| **Output Voltage:**<br>(Input voltage less on-state voltage drop) | On-state voltage drop:<br>Action 1 (AC) = 2.5 VRMS<br>Action 1 (DC) = 3.0 VDC<br>Action 2 (AC) = 2.0 VRMS<br>Action 2 (DC) = 1.5 VDC |
| **Output Current:** | Maximum:<br>All Actions = 500 ma.<br>Minimum:<br>Action 1 (AC or DC) = 20 ma.<br>Action 2 (AC Only) = 20 ma.<br>Leakage:<br>Action 1 (AC or DC) = 2 ma.<br>Action 2 (AC Only) = 2 ma. |
| **Operating Parameters:** | Repeat Accuracy:<br>Fixed Conditions = ± .5%, ± 1 cycle for AC units. Overall variation = ± 3%<br>Input voltage range:<br>± 10% @ 50 or 60 Hz for AC units<br>± 10% @ 20% max. pp. ripple for DC units<br>Temperature range:<br>-10º to 70º C operating<br>-20º to 85º C storage<br>Reset time:<br>All Actions = 50 ms.<br>Initiate time (Control Switch):<br>Action 2 = 50 ms. |
| **Size (less leads):** | Action 1 = 1.25"L x 1.0"W x .5" Thick<br>Action 2 = 1.38" Square x .5" Thick |
| **Termination:** | 22 AWG solid tinned copper leads 1.75" Long |


© 2015 ICS, A Unit of QCircuits Inc.

# ON, OFF, INTERVAL & RECYCLE Time Delay Action Descriptions

Phone 847-797-6678
sales@ics-timers.com

## ON DELAY, ACTION 1

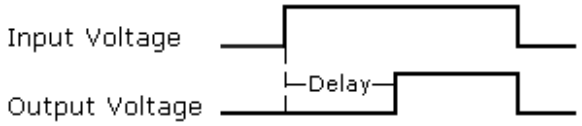


Upon application of the input voltage, the delay begins. As soon as the delay is completed, the output is energized. When the input voltage is removed, the output returns to the de-energized state.

## OFF DELAY, ACTION 2

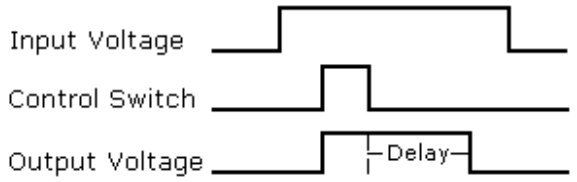


Input voltage must be applied continuously. The output is energized when the control switch is closed. When the control switch is opened, the delay begins. When the delay is completed, the output is de-energized.

## RECYCLE TIMER, ACTION 6

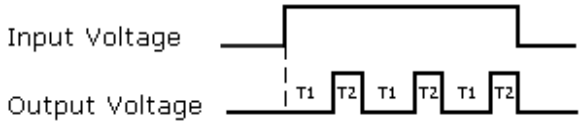


Input voltage must be applied continuously. The OFF CYCLE (T1) is initiated when the input voltage is applied. At the end of the delay, the output is energized and the ON CYCLE (T2) begins. The OFF and ON DELAYS continue until input voltage is removed. T1 and T2 are independently adjustable.

## INTERVAL DELAY, ACTION 3

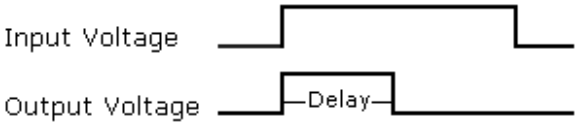


Upon application of the input voltage, the output is energized and the delay begins. When the delay is completed, the output is de-energized.

## RECYCLE TIMER, ACTION 5

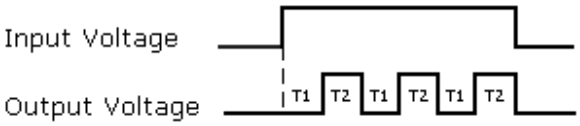


Input voltage must be applied continuously. The OFF CYCLE (T1) is initiated when the input voltage is applied. At the end of the delay, the output is energized and the ON CYCLE (T2) begins The OFF and ON DELAYS continue until the input voltage is removed.

***Note. REPEAT CYCLE TIMERS are also known as RECYCLE TIMERS.***

ICS, A Unit of QCircuits Inc. 2775 Algonquin Road Suite 300 Rolling Meadows, IL 60008
TEL (847) 797-6678 www.ics-timers.com FAX (847) 797-7418
© 2015 ICS, A Unit of QCircuits Inc.

KD Digital Countdown Series Action 1 & Action 2 Icsotimer

# KD Series ON DELAY & OFF DELAY Footprints and Wirng Diagram

Phone 847-797-6678
sales@ics-timers.com

**Footprints:** Dimensions are in inches, lead spacing is 0.2" centers

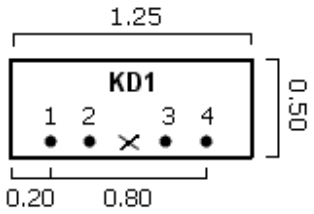


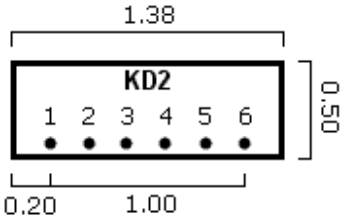


## Wiring Diagrams

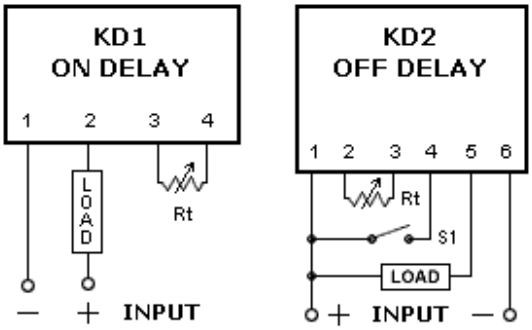


Shown is the flat side with catalog numbers.

**Time vs. Resistance:**
Minimum Time = Rt at 0 Ohm
Maximum Time = Rt at 1M Ohm

*Heatsink leads when soldering close to module.

ICS, A Unit of QCircuits Inc. 2775 Algonquin Road Suite 300 Rolling Meadows, IL 60008
TEL (847) 797-6678 www.ics-timers.com FAX (847) 797-7418
© 2015 ICS, A Unit of QCircuits Inc.

Phone 847-797-6678
sales@ics-timers.com

## Typical Application

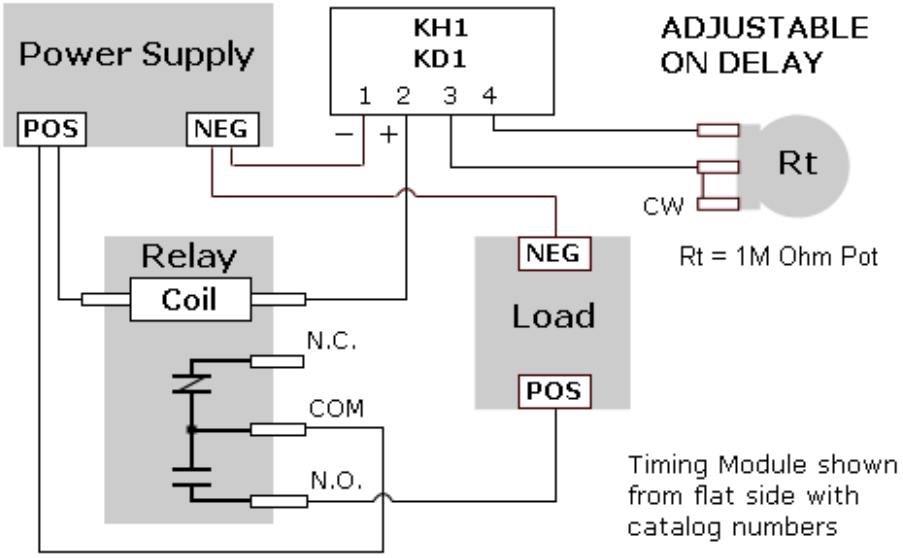


**Figure 2. Adjustable time ON DELAY application example**
**KH1 and KD1 Series DC Input Icsotimers**

**Time vs. Resistance:**
Minimum Time = Rt at 0 Ohm
Maximum Time = Rt at 1M Ohm

*Heatsink leads when soldering close to module.


© 2015 ICS, A Unit of QCircuits Inc.

Phone 847-797-6678
sales@ics-timers.com

## Typical Application

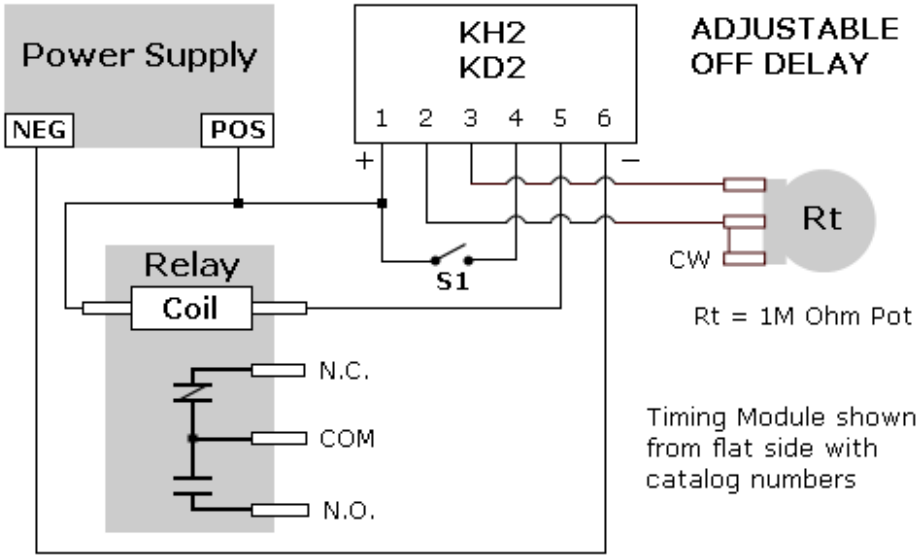


**Figure 6. Adjustable OFF DELAY timer application example**
**KH2 Series and KD2 Series DC Input Icsotimers**

**Time vs. Resistance:**
Minimum Time = Rt at 0 Ohm
Maximum Time = Rt at 1M Ohm

*Heatsink leads when soldering close to module.


© 2015 ICS, A Unit of QCircuits Inc.